Turada® Hardwood Shingles and Shakes
Installation instructions

1. General

1.1 Maximum Exposure: Maximum exposure for wood shingles and shakes shall comply with Table 1 herein, unless specifically specified in the roof assemblies Product Approval.

1.2 Solid and Spaced Sheathing: Wood shingles and shakes may be applied over solid or spaced sheathing. In spaced sheathing applications, the first 36 inches above the eave line shall be solidly sheathed. Solid and spaced sheathing shall comply with the provisions set forth in Chapters 15 and 23 (High-Velocity Hurricane Zones) of the ***Florida Building Code, Building***.

1.3 Maximum Roof Height: Wood shingles and shakes shall not be installed on roof mean heights greater than 33 feet, unless specifically specified in the roof assemblies Product Approval.

TABLE 1 MAXIMUM EXPOSURE TO WEATHER FOR WOOD SHINGLES AND SHAKES IN INCHES			
Shingle Length (inches)			
Roof Slope	16	18	24
3 $^{1}/_{2}$:12 to 4:12	3.75	4.25	5.75
4:12 or greater	5	5.5	7.5
Shake Length (inches)			
		18	24
4:12 or greater		7.5	10

2. Wood Shingles

2.1 Underlayment:

2.1.1 Solid Sheathing: Two plies of ASTM D 226, Type I underlayment overlapped 19 inches, or a single layer of ASTM D 226 Type II underlayment overlapped a minimum of 4 inches on side laps, and 6 inches on the end laps. Fasten underlayment with corrosion resistant 12 gauge roofing nails through tin caps. Fasten with two staggered rows in the field of the sheet with a maximum fastener spacing of 12 inches on center, and one row at the laps fastened 6 inches on center.

2.1.2 Spaced Sheathing: Underlayment shall be installed at a minimum of 36 inches wide at the eave line, and shall be a minimum of two plies of ASTM D 226, Type I underlayment overlapped 19 inches, or a single layer of ASTM D 226 Type II underlayment overlapped a minimum of 4 inches on side laps, and 6 inches on the end laps. Fasten underlayment with corrosion resistant 12 gauge roofing nails through tin caps. Fasten with two (2) staggered rows in the field of the sheet with a maximum fastener spacing of 12 inches on center, and one row at the laps fastened 6 inches on center, at a minimum of 36 inches from the eave of the roof.

2.1.3 Roofing Nail Penetration: Roofing nails shall be of sufficient length to penetrate through the plywood panel or wood plank decking not less than $^{3}/_{16}$ inch, or to penetrate into a 1 inch, or greater, thickness of lumber not less than 1 inch

2.2 Edge Metal: Edge metal shall comply with Section 1517.6 of the ***Florida Building Code, Building***, and RAS 111.

2.3 Valleys: Valleys may be installed open or closed. A 36 inches wide sheet of minimum ASTM D 226 Type II organic underlayment shall be installed over the underlayment and centered in the valley, fastened 6 inches on center through tin-caps at each edge of the sheet. Minimum end laps shall be 12 inches and fully adhered with approved flashing cement.

2.4 Valley Metal: Valley metals shall comply with the Section 1517.6 of the ***Florida Building Code, Building***. Valley metal shall be preformed with side returns and a minimum 1 inch high center water diverter. Valley metal shall have a minimum formed width of 20 inches Valley metal shall be fastened with minimum 2 inches wide metal clips spaced 12 inches on center. Metal clips shall be fabricated of similar metal and fastened with minimum two approved $1^1/_4$ inches annular ring shank roofing nails at every clip (See Detail A).

2.5 Metal Laps: Metal laps shall be a minimum of 12 inches, and shall be sealed with approved flashing cement. For open valley installations, the wood shingles are to be cut to form a straight edge. The open area of the valley shall be no less than 4 inches and no more than 8 inches wide. For closed valley installations, the wood shingles are to be miter cut along the center water diverter. Wood shingle fasteners shall be kept back at least 8 inches from the valley centerline. Wider wood shingles and the positioning of the fasteners higher at the valley may be required.

2.6 Exposure: The maximum exposure to the weather for wood shingle applications shall comply with Table 1 herein.

2.7 Interlayment: An optional interlayment sheet may be installed between wood shingles in solid sheathing applications. Interlayment shall be required in all spaced sheathing applications. Interlayment shall be a minimum of ASTM D 226, Type I interlayment with a minimum width of 18 inches and shall be applied between each succeeding course of wood shingles. Interlayment shall be fastened on the upper edge of the sheet. The bottom edge of the interlayment shall be positioned above the butt edge of each course of wood shingles, a distance equal to triple the weather exposure of the wood shingles. Extend interlayment up vertical surfaces a minimum of 4 inches No interlayment shall be exposed.

2.8 Starter Course: The beginning or starter course of wood shingles at the eave line shall be doubled as a minimum. The wood shingles shall be project 1½ inches beyond the drip edge at both eaves and rakes. Spacing between shingles (joints or key ways) shall be a minimum of $^1/_4$ inch and a maximum of $^3/_8$ inch Shingles shall be positioned so that they cover the joints in the preceding course and adjacent courses shall be offset a minimum of $1^1/_2$ inches in any three courses (adjacent), no two joints should be directly aligned (See Detail B).

2.9 Shingle Attachment: Each shingle shall be fastened with a minimum of two (2) 5d #304 stainless steel ring shank nails with a minimum length of 1¾ inches. Fasten shingle $^3/_4$ inch to 1 inch from the edge of the shingle, and $1^1/_2$ inches to 2 inches above the butt line of the next course. In all cases, fasteners shall be of sufficient length to penetrate through the plywood panel or wood plank decking not less than ¾ inch, or to penetrate into a 1 inch, or greater, thickness of lumber not less than 1 inch Nails shall be driven straight and flush. Nails shall not be overdriven or underdriven (See Detail C).

2.10 Hip and Ridges: Hip and ridges may be installed from pre-manufactured units or field assembled units from manufacturer's shingles. The exposed juncture of the roof hip and ridge areas shall be covered with a minimum 6 inches wide strip of ASTM D 226 Type II organic underlayment, prior to installing the hip and ridge units. No underlayment shall be left exposed. Lay alternate overlapping hip and ridge units, starting with a double starter course. Each side of the hip and ridge units shall be a minimum of 4 inches wide. Each hip and ridge unit shall be fastened to the roof with two fasteners of the same type as that used for the field shingles. Fasteners shall be of sufficient length to penetrate the plywood panel or wood plank decking not less than $^3/_{16}$ inch; or to penetrate into a 1

inch, or greater, thickness of lumber not less than 1 inch Nails shall be driven straight and flush. Nails shall not be overdriven (See Detail C).

2.11 Metal Flashing: Metal flashing materials shall comply with Section 1517.6 of the ***Florida Building Code, Building***. Metal step flashing shall be used at all vertical side walls. The length of the step flashing units shall be 3 inches longer than the exposure of the shingles. The step-flashing unit shall be installed just up slope from the exposed area of the wood shingle, in such a manner as to be covered by the next wood shingle, while maintaining a minimum 3 inches headlap. Step flashing metal shall extend 5 inches up the vertical surface and 5 inches horizontally onto the wood shingle. Nail each step-flashing unit near the upper corner. Location of the shingle fasteners must be adjusted to insure that the step flashing is not penetrated. Vertical head walls shall be flashed with apron type metal flashing. Wood shingles shall be installed up to the vertical head wall and out over the top course of wood shingles a minimum of 5 inches Wall treatment or flashing or head wall flashing a minimum of 3 inches and shall terminate a minimum of 1 inch above the surface of the wood shingles. Metal counter flashing shall be installed in compliance with Roofing Application Standard RAS 111.

2.12 Roof Penetration: Roof penetration that protrudes through a roof shall be flashed at all intersecting angles to prevent leakage. Flashing details shall be in compliance with manufacturer's recommendations, unless otherwise indicated in roof assembly's Product Approval.

3. Wood Shakes

3.1 Underlayment:

3.1.1 Solid Sheathing: Two plies of ASTM D 226, Type I underlayment overlapped 19 inches, or a single layer of ASTM D 226 Type II underlayment overlapped a minimum of 4 inches on side laps and 6 inches on the end laps. Fasten underlayment with corrosion resistant 12 gauge roofing nails through tin caps. Fasten with two staggered rows in the field of the sheet with a maximum fastener spacing of 12 inches on center, and one row at the laps fastened 6 inches on center.

3.1.2 Spaced Sheathing: Underlayment shall be installed at a minimum of 36 inches wide at the eave line, and shall be a minimum of two plies of ASTM D 226, Type I underlayment overlapped 19 inches, or a single layer of ASTM D 226 Type II underlayment overlapped a minimum of 4 inches on side laps and 6 inches on the end laps. Fasten underlayment with corrosion resistant 12 gauge roofing nails through tin caps. Fasten with two staggered rows in the field of the sheet with a maximum fastener spacing of 12 inches on center, and one row at the laps, fastened 6 inches on center, at a minimum of 36 inches from the eave of the roof.

3.1.3 Roofing Nail Penetration: Roofing nails shall be of sufficient length to penetrate through the plywood panel or wood plank decking not less than $^{3}/_{16}$ inch, or to penetrate into a 1 inch, or greater, thickness of lumber not less than 1 inch

3.2 Interlayment: Interlayment shall be a minimum of ASTM D 226 Type I interlayment with a minimum width of 18 inches and shall be applied between each succeeding course of shakes. Interlayment shall be fastened on the upper edge of the sheet. The bottom edge of the interlayment shall be positioned above the butt edge of each course of shakes, a distance equal to twice the weather exposure of the wood shakes. Extend interlayment up vertical surfaces a minimum of 4 inches No interlayment shall be exposed.

3.3 Edge Metal: Edge metal shall comply with Section 1517.6 of the ***Florida Building Code, Building*** and RAS 111.

3.4 Valleys: Valleys may be installed open or closed. A 36 inches wide sheet of minimum ASTM D 226 Type II organic underlayment shall be installed over the underlayment and centered in the valley, fastened 6 inches on center

through tin-caps at each edge of the sheet. Minimum end laps shall be 12 inches and fully adhered with approved flashing cement.

3.5 Valley Metal: Valley metals shall comply with the Section 1517.6 of the ***Florida Building Code, Building***. Valley metal shall be preformed with side returns and a minimum 1 inch high center water diverter. Valley metal shall have a minimum formed width of 20 inches Valley metal shall be fastened with minimum 2 inches wide metal clips spaced 12 inches on center. Metal clips shall be fabricated of similar metal and fastened with minimum two approved $1^1/_4$ inches annular ring shank roofing nails at every clip (See Detail A).

3.6 Metal Laps: Metal laps shall be a minimum of 12 inches, and shall be sealed with approved flashing cement. For open valley installations, the wood shakes are to be cut to form a straight edge. The open area of the valley shall be no less than 4 inches and no more than 8 inches wide. For closed valley installations, the wood shakes are to be miter cut along the center water diverter. Wood shake fasteners shall be kept back at least 8 inches from the valley centerline. Wider wood shakes and the positioning of the fasteners higher at the valley may be required.

3.7 Maximum Exposure: The maximum exposure to the weather for wood shakes shall comply with Table 1 herein. An interlayment sheet shall be installed between each shake. The beginning or starter course of wood shakes at the eave line shall be doubled as a minimum. The wood shakes shall project 1½ inches beyond the drip edge at both eaves and rakes.

3.8 Shake Spacing: Spacing between shakes (joints or key ways) shall be a minimum $^1/_4$ inch and a maximum of $^5/_8$ inch Shakes shall be positioned so that they cover the joints in the preceding course. Adjacent courses shall be offset a minimum of $1^1/_2$ inches in any three courses (adjacent), no two joints should be directly aligned (See Detail D).

3.9 Shake Attachment: Each shake shall be fastened with a minimum of two (2) 5d #304 stainless steel ring shank nails with a minimum length of 1¾ inches. Fasten shake $^3/_4$ inch to 1 inch from the edge of the shake, and $1^1/_2$ inches to 2 inches above the butt line of the next course. In all cases, fasteners shall be of sufficient length to penetrate through the plywood panel or wood plank decking not less than ¾ inch, or to penetrate into a 1 inch, or greater, thickness of lumber not less than 1 inch. Nails shall be driven straight and flush. Nails shall not be overdriven or underdriven (See Detail C).

3.10 Hip and Ridge: Hip and ridges may be installed from pre-manufactured units or field assembled units from manufacturer's shakes. The exposed juncture of the roof hip and ridge areas shall be covered with a minimum 6 inches wide strip of ASTM D 226 Type II organic underlayment, prior to installing the hip and ridge units. No underlayment shall be left exposed. Lay alternate overlapping hip and ridge units, starting with a double starter course. Each side of the hip and ridge units shall be a minimum of 4 inches wide. Each hip and ridge unit shall be fastened to the roof with two fasteners of the same type as that used for the field shakes. Fasteners shall be of sufficient length to penetrate the plywood panel or wood plank decking not less than $^3/_{16}$ inch; or to penetrate into a 1 inch, or greater, thickness of lumber not less than 1 inch Nails shall be driven straight and flush. Nails shall not be overdriven. (See Detail C).

3.11 Metal Flashing: Metal flashing materials shall comply with Section 1517.6 of the ***Florida Building Code, Building***. Metal step flashing shall be used at all vertical side walls. The length of the step flashing units shall be 3 inches longer than the exposure of the shakes. The step-flashing unit shall be installed just up slope from the exposed area of the wood shake, in such a manner as to be covered by the next wood shake while maintaining a minimum 3 inches headlap. Step flashing metal shall extend 5 inches up the vertical surface and 5 inches horizontally onto the wood shake. Nail each step-flashing unit near the upper corner. Location of the shake fasteners must be adjusted to insure that the step flashing is not penetrated. Vertical head walls shall be flashed with apron type metal flashing. Wood shake shall be installed up to the vertical head wall. The head wall flashing shall then be installed to extend up the vertical surface 5 inches, and out over the top course of wood shake a minimum of 5 inches Wall treatment or metal counterflashing shall be brought down over all vertical flanges of the step flashing or head wall flashing a

minimum of 3 inches and shall terminate a minimum of 1 inch above the surface of the wood shake. Metal counterflashing shall be installed in compliance with RAS 111.

3.12 Roof Penetration: Roof penetrations that protrude through a roof shall be flashed at all intersecting angles to prevent leakage. Flashing details shall be in compliance with manufacturer's recommendations, unless otherwise indicated in roof assembly's Product Approval.

4. Class A Fire Rated System Application (See Detail E)

4.1 Regardless of style, the following basic installation details must be observed (See Detail E).

4.2 Shingles must be doubled or tripled at the eaves.

4.3 Shingle butts of first course should extend 1½ inches beyond the fascia.

4.4 Spacing between adjacent shingles should be a minimum of ¼ inch and a maximum of $^{3}/_{8}$ inch.

4.5 Joints in any one course should be separated not less than 1-1/2 inch from joints in adjacent courses; and in any three courses, no two joints should be in direct alignment.

4.6 In lesser grade shingles containing both flat and vertical grain, joints should not be aligned with centerline of heart.

4.7 Flat grain shingles wider that 9 inches should be split in two before nailing. Knots and similar defects should be treated as the edge of the shingles and the joints in the course above placed 1½ inches from the edge of the defect.

4.8 Minimum length 13/4 inches stainless steel 5d ring shank nails.

Turada® Hardwood Shingles comply with ASTM E108 for an external fire resistance rating of Class "A" for roof covering when applied over a non-combustible deck consisting of a layer Solid or Spaced Sheathing with ½" Densdeck™ over it and a layer of 30 lb organic felt underlayment applied over the Densdeck™. (See Detail E).

Detail A

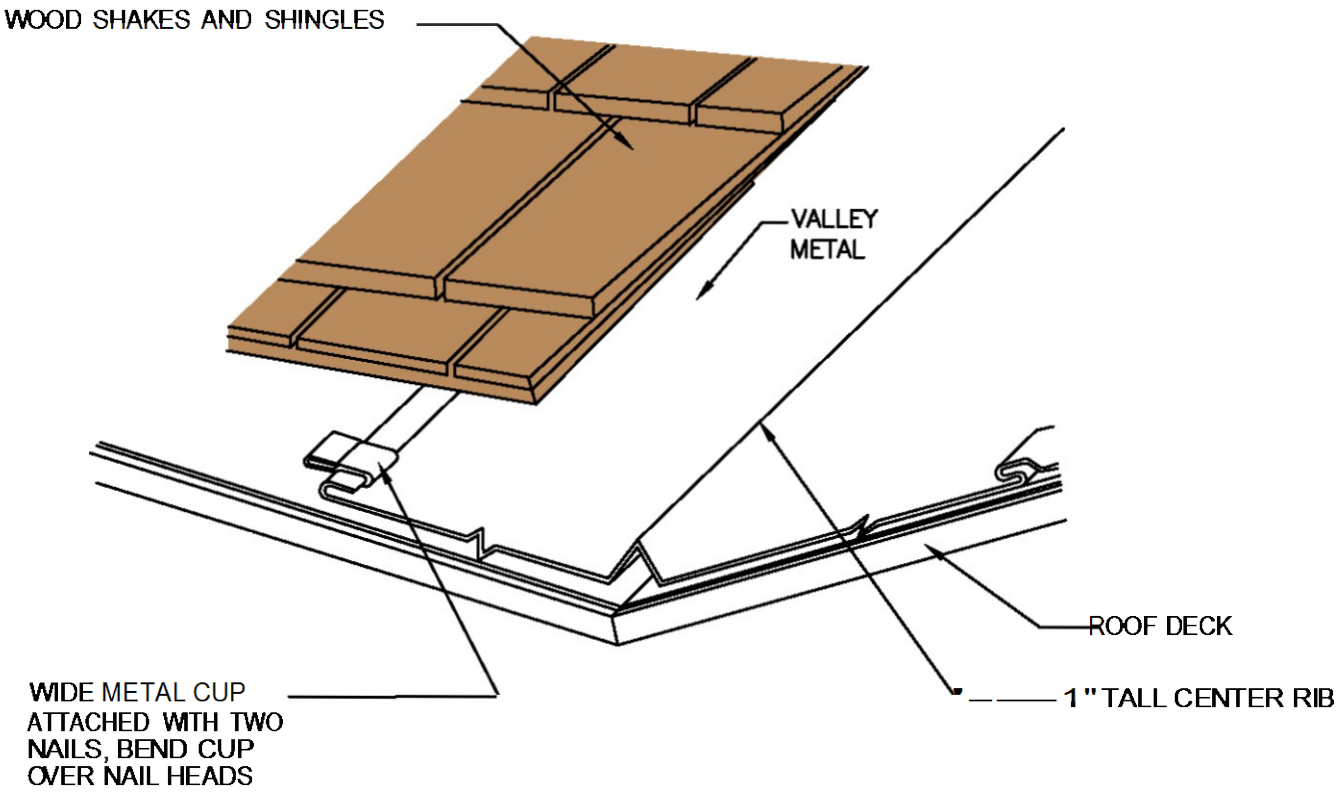
WOOD SHAKES AND SHINGLES
VALLEY METAL
ROOF DECK
WIDE METAL CUP ATTACHED WITH TWO NAILS, BEND CUP OVER NAIL HEADS
1" TALL CENTER RIB

Turada® Hardwood Shingles and Shakes
Installation instructions

Detail B

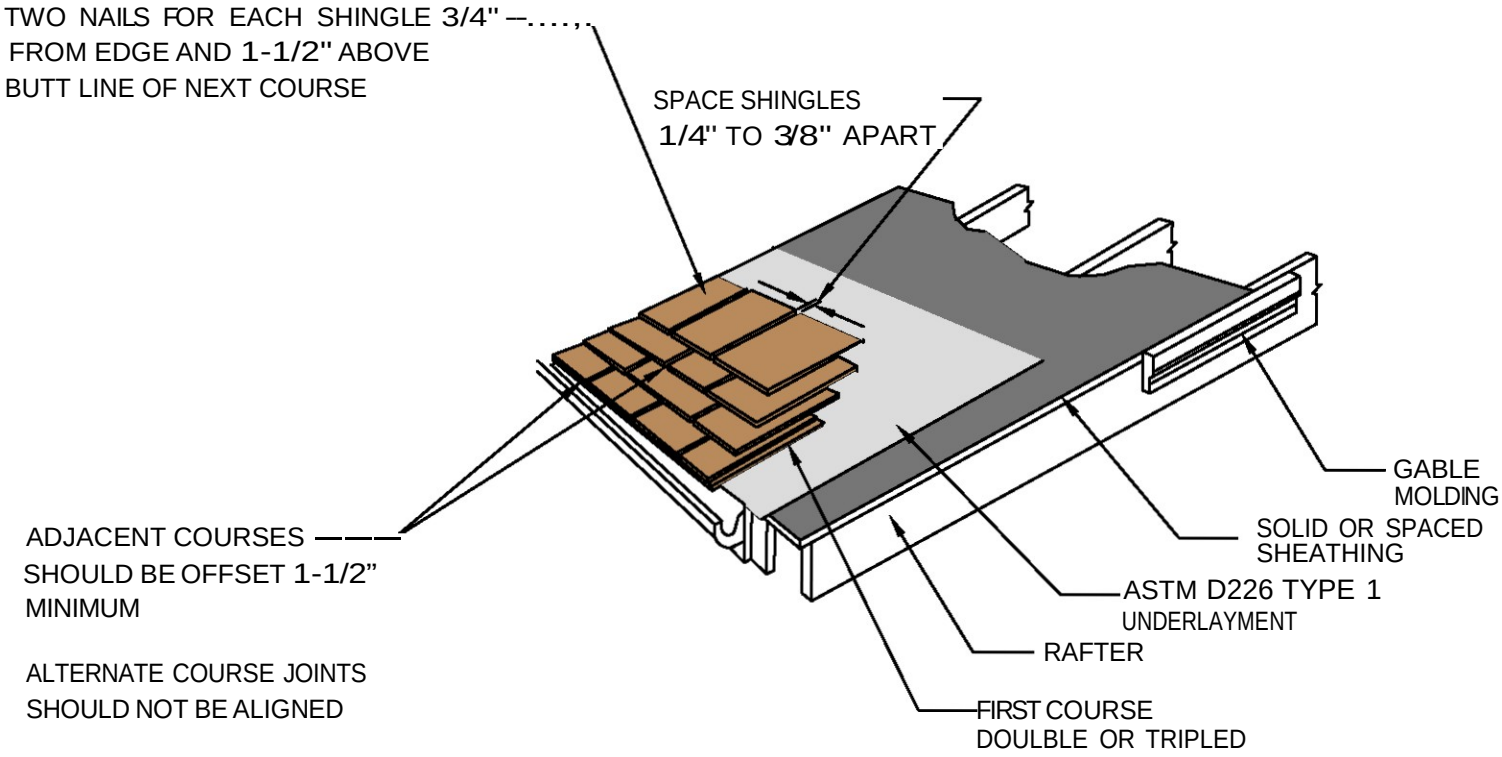

Detail C

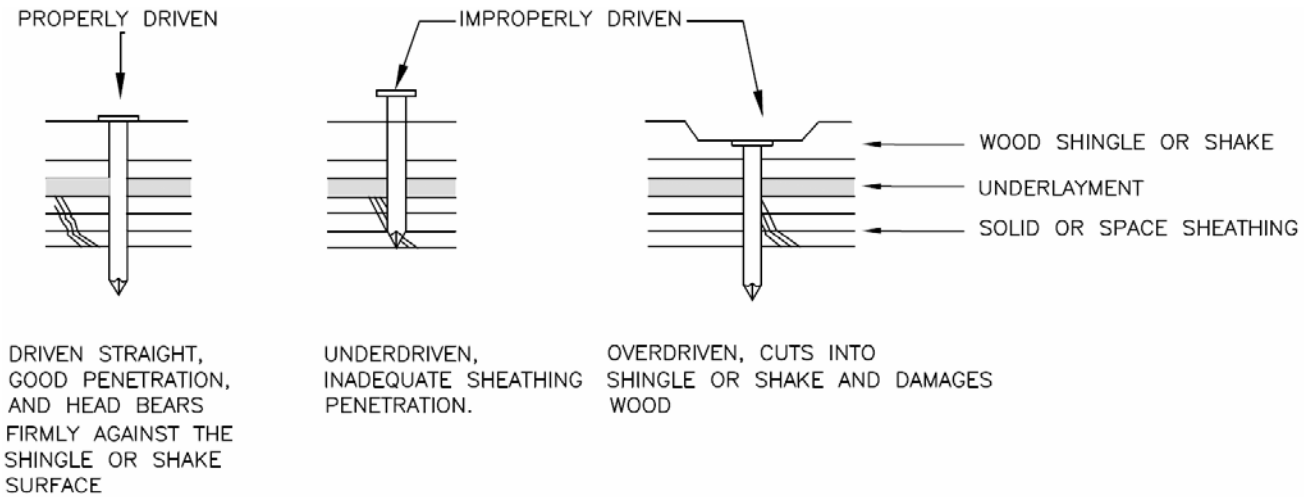
PROPERLY DRIVEN
IMPROPERLY DRIVEN
WOOD SHINGLE OR SHAKE
UNDERLAYMENT
SOLID OR SPACE SHEATHING
DRIVEN STRAIGHT, GOOD PENETRATION, AND HEAD BEARS FIRMLY AGAINST THE SHINGLE OR SHAKE SURFACE
UNDERDRIVEN, INADEQUATE SHEATHING PENETRATION.
OVERDRIVEN, CUTS INTO SHINGLE OR SHAKE AND DAMAGES WOOD

Turada® Hardwood Shingles and Shakes
Installation instructions

Detail D

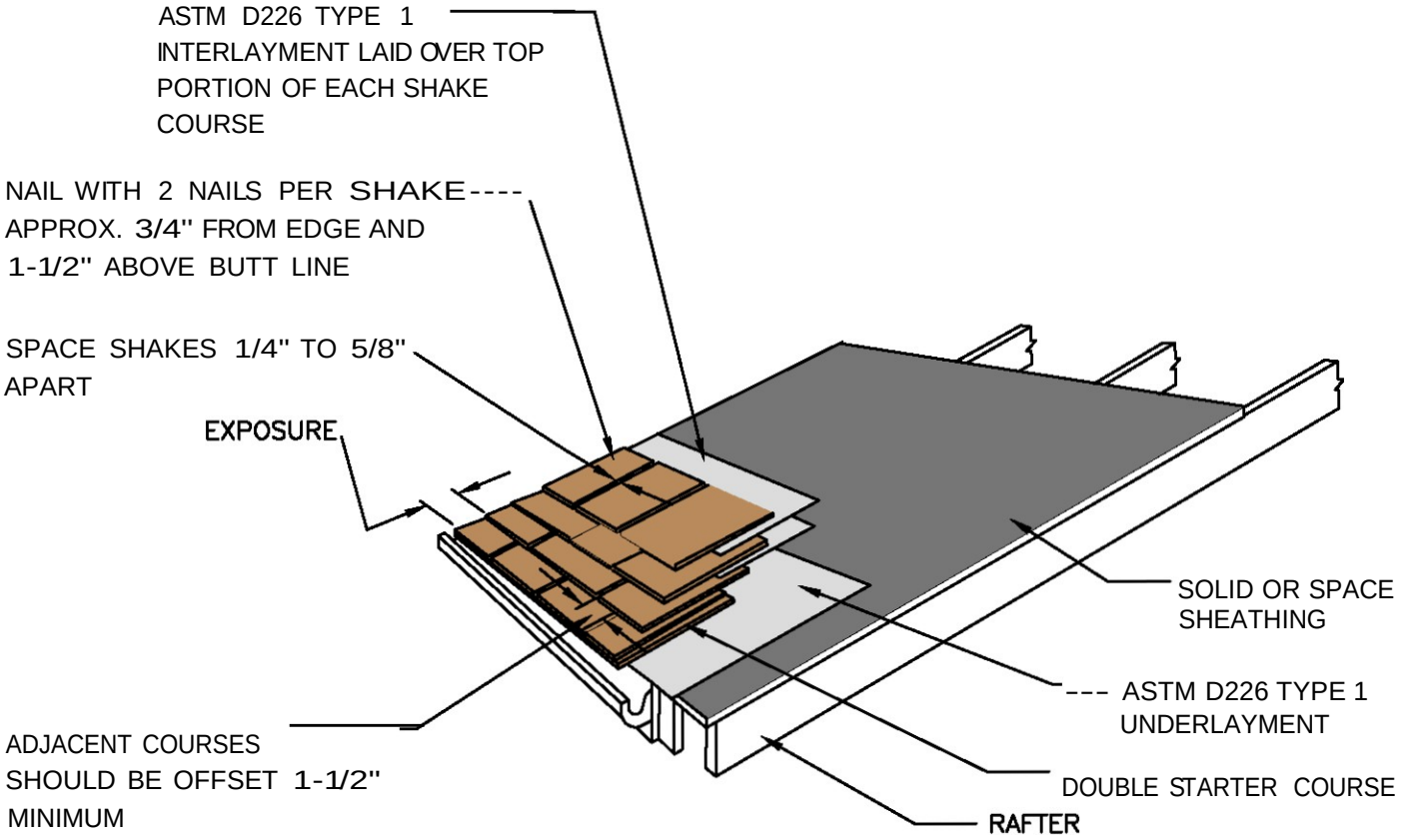

Turada® Hardwood Shingles and Shakes
Installation instructions

Detail E

Class “A” Fire Rated Roof System

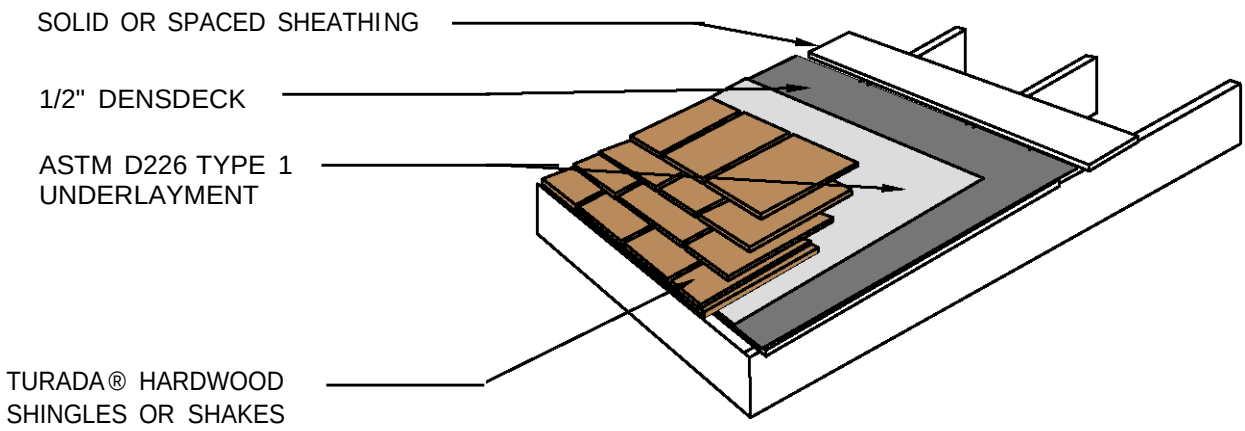

Detail F – Shingle

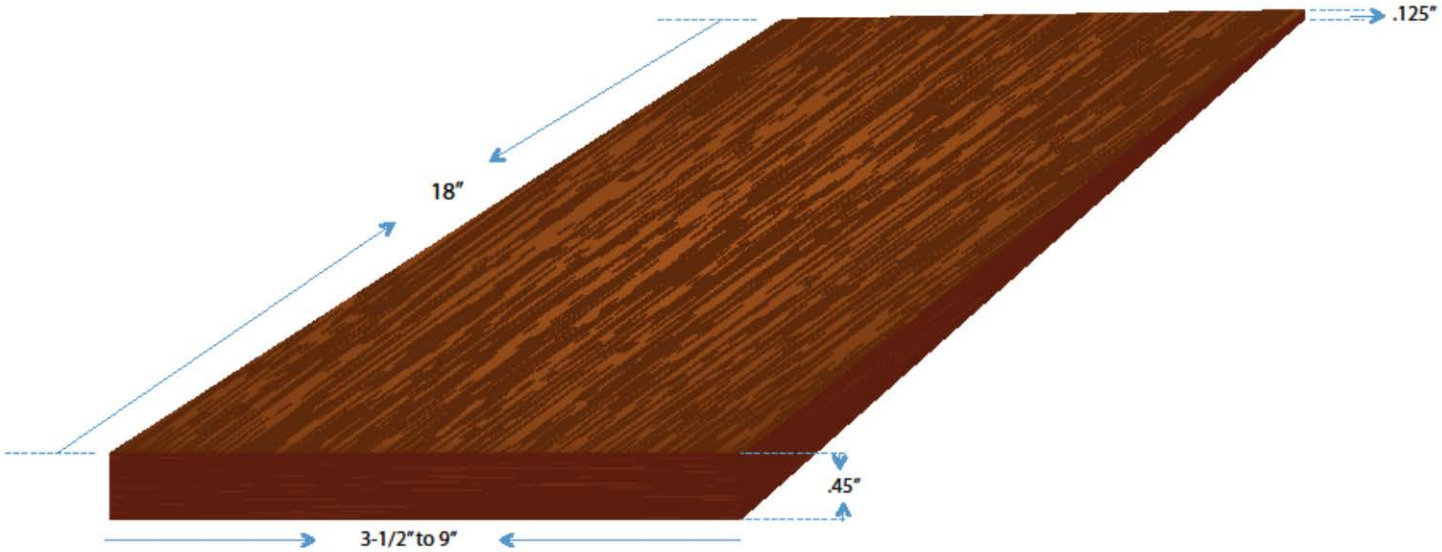

Turada® Hardwood Shingles and Shakes
Installation instructions
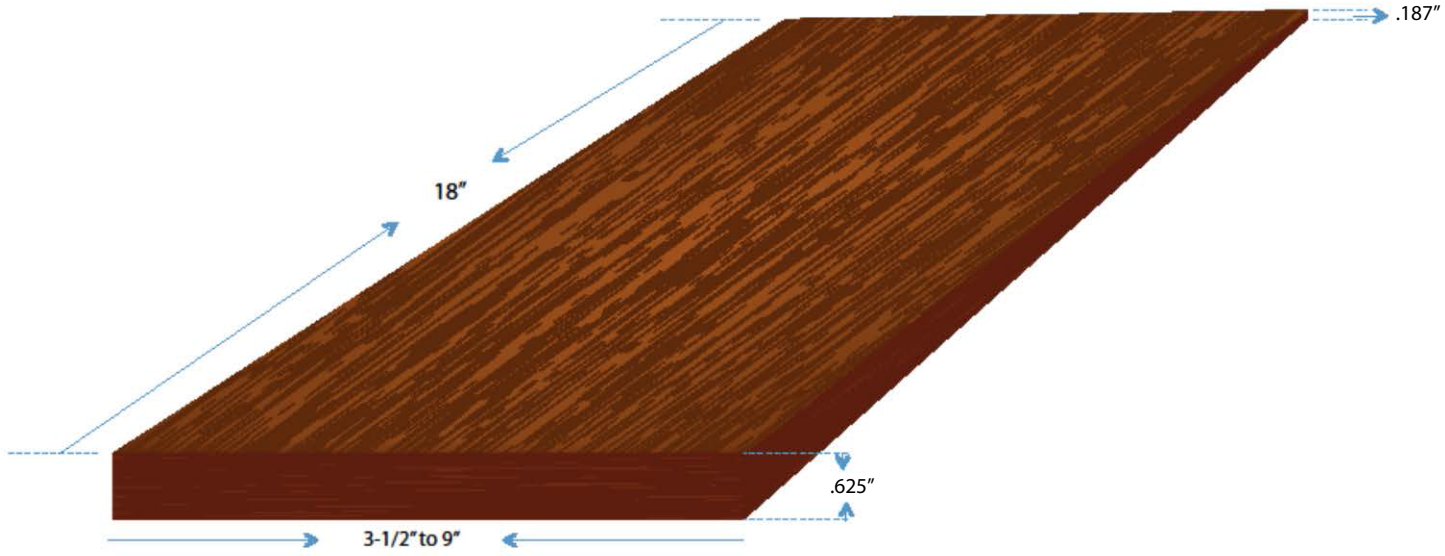
Detail G - Tapersawn Shake